WMP-17F

Medical AIO Core ™ Fan

Features

- Intel® Skylake i7/i5/i3/Pentium Fanless Medical Panel PC
- 17" 1280x1024 LCD panel
- Highest Level EMC 4.0/ Safety 3.1 Certification Ready
- Support Intel® vPro by Optional i7/i5 CPU
- Anti-Bacteria Plastic Housing
- Friendly Design of Front Function Hot-Keys
- Optional PCI-E x16 Expansion Slot
- Optional Built-In Battery Pack
- Optional 4KV LAN/COM/USB Isolated I/O
- Optional DICOM Part 14 Solution

Specification

Model	WMP 17F IPOA (STD)	WMP 17F IPOB (ISO)
CPU / Chipset	LGA1151 package 6th generation Intel® Core i7/i5/i3/Pentium processor / Intel® Q170 Chipset	
Graphic	Intel® integrated HD Graphics 530	
RAM	Two 2400 MHz DDR4 SODIMM socket support dual Channel, non-ECC, up to 32GB	
OS Support	Windows 7 embedded, Windows 7 pro, Windows 8 embedded, Windows 8 industrial, Windows 10	
Storage	2.5" SATA HDD drive bay x 1 ,mSATA via mini PCI-E x 1, Optional 2.5" SATA HDD up to 1TB	
Expansion	PCI-E (x4) x1, Mini PCIe x1, M.2 Type E x1 Optional Network Interface: 802.11 ac/a/b/g/n WLAN + Bluetooth 4.1 module	
Display Size	17" wide TFT-Color LCD	
Display	1280 x 1024 (SXGA), 16.2M colors (MVA, 8 bit), 170(H) / 160(V), 350 nits (Typ. Center point), CR:1000 : 1 (Typ)	
Touch Screen	5 Wire Resistive Touch Panel / Light Transmission: 90% ± 3% / Hardness: 7H pencil, pressure 750g/45° / Life: 100M times	
USB	USB3.0 x 4	
COM	RS232/422/485 x 1:Support RS485 Auto flow control function, RS232 x 1	
LAN	RJ45 X 2	
Audio/ Video	3.5mm phone jack connector * 2 (Line-out, Mic-In)/ DVI-D x 1 + DP x 1	
Control Hot Key (R to L)	Brightness down/Brightness up // Power // Volume down/Volume up	
Cooling	Smart Fan	
Power Input / Consumption	DC-In x 1, DC 7~32V input / 100 W (Full loading)	
Power Adapter	AC input 100~240V / 47 ~ 63 Hz / DC output 24V, 8.33A	
Temperature	Operating Temperature: 0~35℃ (chamber) / Storage Temperature: -20~60℃	
Humidity	Operating & Storage:10 ~ 90%, non-condensing	
IP Rating / Housing	IP65 (Front Side) / Front: Full flat design/ Touch (standard)/ Glass(customized); Rear: Plastic White w/Anti-bacteria (MRSA), Housing	
Dimensions (Net)	420mm (H) x 360mm (V) x 83mm (T)	
Weights (Net)	7 kg (w/o power adapter/battery pack)	
Mounting	Optional Stand, VESA 75/ 100	
Certification	cULus/EN/UL/60601-1, 60601-1-2 4th Edition, IEC62133, FCC/CE/VCCI Class B, Energy Star 6.1	

Dimensions

Units (mm)

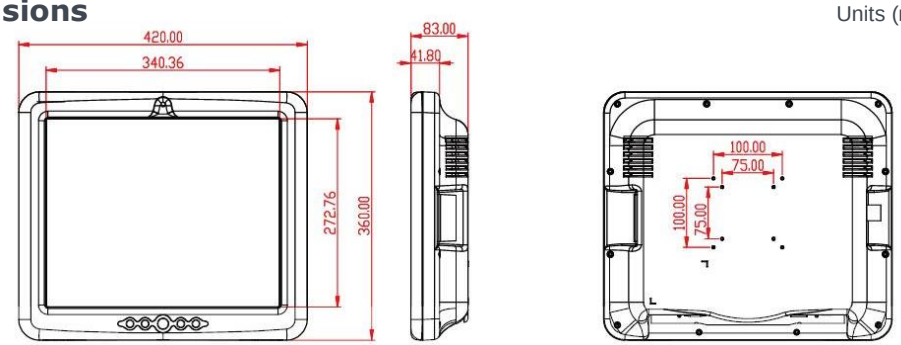

Major Options	
Add On Parts	1.3.2M Webcam(USB), 2.TPM 2.0 module, 3.Wireless or Wireless + BT kit, 4.RFID (13.56MHz), 5.AG Film,6. PCI-E [x4] riser card, 7. Equipotential Terminal Pin, 8. Microphone on I/O cover, 9. Battery pack (100W max.) Support add-on card 18W max 10. mSATA module
Power Cable	1.Power adapter w/ 2.4m or 3.6m DC cable, 2.Power plug holder
Optional kits	1.Anti-bacteria Stand, 2.VESA Wall Mount
Customized	1.Temper Glass; 2. Extra USB x 2 or COM x 2, 3. 4KV Isolation Card x 1 (Isolation COM x 2, Isolation LAN x 1, Isolation USB x 1), 4. DICOM Solution, 5. PCI Riser Card

Order Information

Item	Configuration
WMP-17F – IR0A	Core i5-6500TE 2.3GHz / 4G RAM / 128G SSD / Full flat R touch / STD
WMP-17F – IR0B	Core i5-6500TE 2.3GHz / 4G RAM / 128G SSD / Full flat R touch / ISO

STD IO Parts

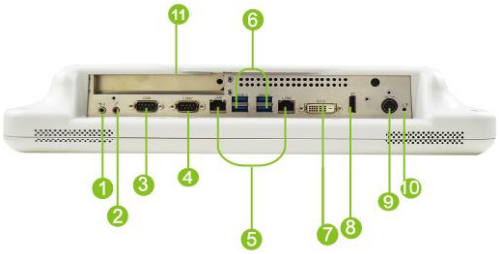

1. Line-out
2. Micropone-in
3. RS232/422/485
4. RS232
5. LAN x 2
6. USB 3.0 x 4
7. DVI-D
8. DP x 1
9. DC-in
10. Reset
11. PCI-E[x16] expansion