WMP-24V-PIS-L

Medical OR Panel PC



Features

- Intel® Core Ultra 100 /200 Series CPU (H series), 28W max.
- Anti-bacteria Aluminum Housing
- 23.8" FHD MVA Diagnostic Panel
- IP65 at front, Rear IP54 protection with cable cover attached
- LAN/COM 4KV Isolated Module
- Power Supply Inside
- Supports Dual Channel DDR5 up to 96GB
- Fast booting with M.2 M Key 2280 PCIe X 4 SSD (Support NVMe SSD) as drive disk
- Fanless solution
- OS Recovery & Optional Single Sign On RFID

Specification

Model	WMP-24V-PIS-L IP0N (STD)	WMP-24V-PIS-L IP0N (ISO)
Main System		
CPU / Chipset	FCBGA 2049 Intel® Core Ultra 100/ 200 Series CPU (H series), 28W max./ Soc	
Graphic	Intel® ARC Graphics	
RAM	Two 6400 MHz DDR5 SODIMM socket support dual Channel, non-ECC, up to 96GB	
OS Support	Optional Win 10 IoT Enterprise LTSC 64 bit, Windows 11 IoT Enterprise LTSC 64 bit	
Storage	1 x M.2 (M Key, 2280) with PCIe x4 for SSD, 1 x SATA DOM or E key SSD	
TPM	On board TPM 2.0	
Expansion	1x M.2 E key 2230	
Display Size	23.8” 16:9	
Display	1920 x 1080 (Full HD), 16.7M colors, 178(H) / 178(V), 250 nits (Typ. Center point), CR:3000: 1 (Typ)	
Touch Screen	Full flat projective capacitive touch panel / Light Transmission: 88%+/-3%(STD) / Hardness: ≧6H pencil, pressure 750g/45° / Life: 30,000 hrs	
I.O. Ports	**STD**	**ISO**
USB	2 x USB 3.2 Type A, 1 x USB 3.2 Type C 3 x USB 2.0 Type A (By Cable)	2 x USB 3.2 Type A, 1 x USB 3.2 Type C 3 x USB 2.0 Type A (By Cable)
COM	1 x RS232, 1 x RS232/RS422/RS485	1 x ISO RS232/RS422/RS485
LAN	1 x RJ45 2.5Gbps Intel® I226LM (support AMT/Vpro) 1 x RJ45 2.5Gbps Intel® I226V	1 x RJ45 1Gbps Intel® I219LM (AMT/Vpro) 1 x RJ45 2.5Gbps Intel® I226V, 1 x ISO RJ45 1Gbps
Audio	1 x 3.5mm combo connector (Line-out, Mic-In), 2 x Waterproof 2W speaker	
Video output	1 x DP 1.4a/DP++, 1 x HDMI 2.0b	
Video-In	1 x HDMI-in (with audio); Support in S5 Mode	
Control Hot Key (L to R)	Battery LED Indicator; Power; Menu/Exit; Brightness; Video-In LCD On/Off; Clean Me; Programmable Function	
Mechanical and Environmental		
Cooling	Fanless	
Power Supply	AC input 100 ~240V / 47 ~ 63 Hz / DC output 24V 250W	
Temperature	Operating Temperature: 0~35℃ (IEC60068-2-78) Storage Temperature: -20~60℃	
Humidity	Operating & Storage:10 ~ 90%, non-condensing	
IP Rating	Front: IP65, Rear: IP54 with optional cable cover attached	
Housing	Rear: Aluminum Alloy Body / White (Touch) / Bacteria resistant	
Dimensions (Net)	586.5 mm (H) x 375.5 mm (V) x 68 mm (T)	
Weights (Net)	8.6 kg	
Mounting	VESA 100 x 100	
Certification	CE: EN 60601-1-2:2015 (V4.1) EN 60601-1: 2006/A2:2021; IEC 60601-1:2005, IEC 60601-1:2005/AMD1:2012, IEC 60601-1:2005/AMD2:2020 VCCI: 2016-11, Class B FCC: Part 18 Class B UL: AAMI ES60601-1:2005/(R)2012 and A1:2012/(R)2012 and A2:2021) (By project) cUL: CAN/CSA-C22.2 No. 60601-1:14) (By project)	

Dimensions

Units (mm)

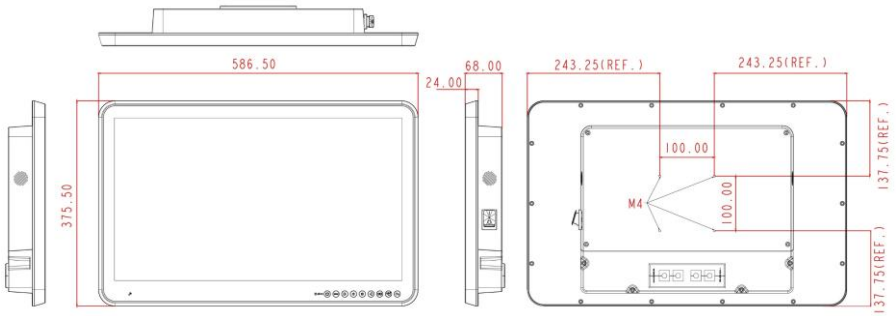

Major Options	
Accessory	1. Cable clean I.O. cover (w/ 3x sealed grommet; w/ 3-4mm *1, 4-5mm*1, 5-6mm*1, 6-7mm*1 7-8mm*1 grommet) 2. WMP series stand, VESA 100
Options	1. Internal Antenna Wifi-7 2. M.2 type 2280 module 3. 2nd Storage (SATA DOM or E key SSD) 4. RFID (13.56MHz) / SSO RFID 5. Equipotential terminal pin 6. AG film 7. Optical bonding 8. Auto focus 5M pixel webcam module (optional order configuration) 9. 2 x 4KV ISO-USB2.0 (High speed - optional order configuration, can't co-exist with Webcam) 10. High Brightness 400 nits Panel
AP/API	1. Watch Dog Timer AP/API 2. On Screen Display AP 3. Intelligent i-Control to Optimize Thermal, Computing and Power AP 4. Hardware Monitoring AP 5. Hotkey Control AP/API
Customization	1. Tempered glass 2. Touch with AG coating - anti-reflective, - anti-microbial, - anti-glare.

Order Information

Item	Configuration
WMP-24V-PIS-IP0N-5	Core Ultra 5 225H 1.7GHz/ DDR5 16G RAM/ M.2 128G SSD/ Full flat P.cap touch (support Intel Standard Manageability)
WMP-24V-PIS-IP0N-7	Core Ultra 7 255H 2.0GHz/ DDR5 16G RAM/ M.2 128G SSD/ Full flat P.cap touch (support Intel Standard Manageability)
WMP-24V-PIS-IP0B-5	Core Ultra 5 225H 1.7GHz/ DDR5 16G RAM/ M.2 128G SSD/ Full flat P.cap touch/ISO (support Intel Standard Manageability)

I/O ports (STD)

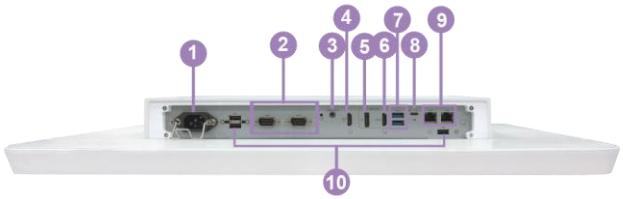

1. AC-in
2. COM x 2
3. Combo Audio x 1
4. Video-in x 1
5. DP out x 1
6. HDMI out x 1
7. USB 3.2 x 2
8. USB Type C x 1
9. LAN x 2
10. USB 2.0 x 3